The new
2004 BMW
5 Series Sedan

525i
530i
545i

The Ultimate
Driving Machine®

امداد خودرو فارما
تلفن پشتیبانی روزی: ۰۲۱-۸۸۸۶۲۰۸۵
FarmaSOS.com

The new 5 Series: BMW's all-around performer, now light-years ahead of the rest.

آبدار خودرو فارسا
تلفن شبانه روزی: ۰۲۱-۸۸۸۶۲۰۸۵
FarmaSOS.com

امداد خودرو فارما
تلفن پشتیبانی روزانه ۰۲۱-۸۸۶۲۰۸۵
FarmaSOS.com

امداد خودرو فارما
FarmaSOS.com

Welcome to the future of driving.

FarmaSOS.com

Primary gauges are recessed under a cowl, and designed for glare-free vision during the day. At night, the gauges glow in a color that is restful on the eyes.

The iDrive Controller, which is conveniently located on the center console, allows you and your passenger to access and tailor many comfort features.

An interior as sleek and compelling as the exterior.

امداد خودرو فارسا
تلفن شبانه روزی: ۰۲۱-۸۸۸۶۲۰۸۵
FarsaSOS.com

Equipment

■ / □ **Xenon low- and high-beam headlights** provide brilliant clarity of the road ahead and to the side at night and in conditions with poor visibility. The dynamic auto-leveling feature adjusts for varying passenger and cargo loads, helping to keep headlight glare out of the eyes of oncoming drivers.

■ **Halogen free-form foglights,** integrated into the deep front spoiler, enhance your margin of safety in bad visibility. Ellipsoid free-form technology ensures even light distribution on the road.

■ Two-way **power glass moonroof** with remote, expanded one-touch operation, slides forward or tilts up to let in as much fresh air and sky as you like, while a wind deflector helps keep the wind out. Includes a sliding interior sunshade.

■ **3-spoke leather-wrapped multi-function steering wheel** lets you keep both hands on the wheel while adjusting various comfort functions, such as changing the radio, CD selections and volume. Optional Voice Control (included with optional on-board navigation system) can be used to change radio stations and audio selection, navigation system destinations, and (accessory) telephone entries.[1] One steering-wheel button can be programmed for your choice of function.

[1] Voice Control and on-board navigation system: date of availability to be determined.

■ **Six-speed manual transmission**, now standard on the 525i, 530i and 545i, delivers a precise, athletic feel that's responsive to your personal driving style. This is due, in part, to the enhanced synchronization of shifts from neutral to each gear. The gearbox adds to the sporty feel with a shortened shift lever and "throw." (Heated seats shown are included in optional Cold Weather Package)

■/□ **Six-speed STEPTRONIC automatic transmission** provides a choice of three modes: "Drive," which incorporates BMW's Adaptive Transmission Control; "Sport" automatic, for a more dynamic shift pattern; and STEPTRONIC automatic, for the hands-on control of a manual without using a clutch. (std. 545i; opt. 525i, 530i. Heated seats shown are included in optional Cold Weather Package)

FarmaGOS.com

■ Standard Equipment □ Optional Equipment

■ **16 x 7.0 Trapezoid (Styling 134) cast alloy wheels and 225/55R-16 all-season tires.** (std. 525i; spare is a space-saver wheel and tire)

■ **17 x 7.5 Star Spoke (Styling 138) cast alloy wheels and 225/50R-17 all-season tires.** (std. 530i; spare is a space-saver wheel and tire)

■ **17 x 7.5 Double Spoke (Styling 116) cast alloy wheels and 225/50R-17 all-season tires.** (std. 545i; spare is a space-saver wheel and tire)

امداد خودرو فارما
تلفن شبانه روزی: ۰۲۱-۸۸۸۶۲۰۸۵
FarmaSOS.com

17 x 8.0 Star Spoke (Styling 122) cast alloy wheels and 245/45R-17 run-flat performance tires.[1] (included in 525i Sport Package; tires not recommended for winter use in ice and snow. Spare is a space-saver wheel and tire)

18 x 8.0 Star Spoke (Styling 123) cast alloy wheels and 245/40R-18 run-flat performance tires.[1] (included in 530i Sport Package; tires not recommended for winter use in ice and snow. Spare is a space-saver wheel and tire)

18 x 8.0 front, 18 x 9.0 rear Star Spoke (Styling 124) cast alloy wheels and 245/40R-18 front, 275/35R-18 rear run-flat performance tires.[1] (std. 545i 6-speed; included in 545i Sport Package; tires not recommended for winter use in ice and snow. Spare is a space-saver wheel and tire)

[1]Due to low-profile tires, please note: wheels, tires and suspension parts are more susceptible to road hazard and consequential damages.

■ Standard equipment ☐ Optional equipment

Standard equipment | Optional equipment

Performance and efficiency	525i	530i	545i	545i 6-speed
2.5-liter, 184-hp dual overhead cam (DOHC), 24-valve inline 6-cylinder engine with Double-VANOS steplessly variable valve timing	●			
3.0-liter, 225-hp dual overhead cam (DOHC), 24-valve inline 6-cylinder engine with Double-VANOS steplessly variable valve timing		●		
4.4-liter, 325-hp 32-valve V-8 engine, 4 overhead camshafts, Valvetronic, and steplessly variable intake manifold			●	●
Aluminum block and cylinder head(s)	●	●	●	●
Dual resonance intake system	●	●		
Direct ignition system with knock control	●	●	●	●
Electronically controlled engine cooling (map cooling)	●	●	●	●
6-speed manual transmission	●	●		●
6-speed STEPTRONIC automatic transmission with Sport and Manual shift modes and Adaptive Transmission Control (ATC)	○	○	●	
6-speed Sequential Manual Gearbox (SMG) with Automated, Manual and Sport programs and Dynamic Driving Control (Sport button)	○[1]	○[2]		○[3]

Handling, ride and braking				
Aluminum double-pivot-type front suspension	●	●	●	●
Aluminum 4-link Integral rear suspension	●	●	●	●
Front and rear anti-roll (stabilizer) bars	●	●	●	●
Aluminum front and rear subframes	●	●	●	●
Twin-tube gas-pressure shock absorbers	●	●	●	●
4-wheel ventilated anti-lock disc brakes (ABS) with Dynamic Brake Control (DBC)	●	●	●	●
Sport suspension calibration	□	□	□	●
Active Roll Stabilization (ARS)	□	□	□	●
Engine-speed-sensitive variable-assist, variable-ratio power steering	●	●	●	
Active Steering with Servotronic power assist	□	□	□	●
Dynamic Stability Control (DSC), including Dynamic Traction Control, electronic brake proportioning and cornering/braking stability enhancement	●	●	●	●

Instrumentation and controls				
Multi-function 3-spoke steering wheel with controls for audio system, cruise control, and accessory phone[4]	●	●	●	●
Electronic analog speedometer and tachometer and LCD main and trip odometers	●	●	●	●
Expanded Check Control vehicle monitor system	●	●	●	●
Head-up Display (HUD)[5] (Date of availability to be determined)	○	○	○	○
iDrive system with on-board computer and controller	●	●	●	●
Exterior temperature display with alarm for freezing temperatures	●	●	●	●
Active Cruise Control (ACC)	○	○	○	○
BMW on-board navigation system with controller with voice feedback and Voice Command System (Date of availability to be determined)	○	○	○	○
BMW Assist integrated wireless communication system	●	●	●	●
Vehicle & Key Memory	●	●	●	●

امداد خودرو فارما
تلفن شبانه روزی: ۰۲۱-۸۸۸۶۲۰۸۵
FarmaSOS.com

● = Standard
○ = Optional
◇ = Included in optional Premium Package
□ = Included in optional Sport Package
◆ = Included in optional Cold Weather Package

[1] Requires Sport Package; date of availability to be determined.
[2] Requires Sport Package; available as of 9/03 production.
[3] Available as of 9/03 production.
[4] If so equipped.
[5] Requires on-board navigation system; not available with Green band windshield.

Exterior and aerodynamics	525i	530i	545i	545i 6-speed
16 x 7.0 Trapezoid (Styling 134) alloy wheels, 225/55R-16 all-season tires[6]	●			
17 x 8.0 Star Spoke (Styling 122) alloy wheels, 245/45R-17 performance run-flat tires[7]	□			
17 x 7.5 Star Spoke (Styling 138) alloy wheels, 225/50R-17 all-season tires[6]		●		
18 x 8.0 Star Spoke (Styling 123) alloy wheels, 245/40R-18 performance run-flat tires[7]		□		
17 x 7.5 Double Spoke (Styling 116) alloy wheels, 225/50R-17 all-season tires[6]			●	
18 x 8.0 front, 18 x 9.0 rear Star Spoke (Styling 124) alloy wheels, 245/40R-18 front, 275/35R-18 rear performance run-flat tires[7]			□	●
Halogen free-form low-beam headlights	●	●		
Xenon Adaptive Headlights with dynamic auto-leveling	○	○	●	●
Automatic headlight control	●	●	●	●
High-pressure headlight cleaning system	◆	◆	◆	◆
Halogen free-form foglights	●	●	●	●
Park Distance Control (front and rear) with graphic display	○	○	○	○
Rain-sensing windshield wipers with adjustable speed	●	●	●	●
Power adjustable, heated, body-colored side-view mirrors	●	●	●	●
Metallic paint	●	●	●	●
Chrome Line exterior trim	●	●	●	
Shadowline exterior trim	□	□	□	●

Interior seating and trim				
Leatherette upholstery	●	●		
Dakota leather upholstery and door trim	○/◇	○/◇	●	●
Titanium finish interior trim	●	●		
Poplar Grain wood interior trim	◇	◇	●	●
Anthracite Maple wood interior trim	○[8]	○[8]	○	○
Split-folding lockable rear seats and ski bag	○	○	○	○
10-way power front seats with power head restraints	●	●	●	
12-way power front sport seats with power adjustable thigh support	□	□	□	●
4-way power lumbar support for front seats	◇	◇	○	○
20-way power multi-function Comfort front seats (includes articulated upper backrest, 4-way lumbar support, passenger's-seat memory, and active head restraints with adjustable side support)	○[9]	○[9]	○	○
2-setting memory system for driver's seat, side-view mirrors, and steering wheel position	●	●	●	●
Open storage compartments in all doors and front seatback storage	●	●	●	●
Adjustable front center armrest	●	●	●	●
Dual center console compartments with provision for phone handset, climate-controlled lower compartment	●	●	●	●
Fold-up rear seat center armrest	●	●	●	●

امداد خودرو فارما
تلفن شبانه روزی: ۰۲۱-۸۸۸۶۲۰۸۵
FarmaSOS.com

[6] Spare is a space-saver wheel and tire.
[7] Spare is a space-saver wheel and tire. Due to low-profile tires, please note: wheels, tires and suspension parts are more susceptible to road hazard and consequential damages.
[8] Optional; requires Premium Package.
[9] Requires optional Dakota leather upholstery.

All vehicle specifications contained in this document are based on the latest product information available at the time of printing. BMW reserves the right to make changes, without notice, in colors, materials, equipment, specifications and models. Further information can be obtained from your authorized BMW center or bmwusa.com.

Standard equipment | Optional equipment

Comfort and convenience	525i	530i	545i	545i 6-speed
Automatic climate control with separate left/right temperature and air distribution controls, with automatic air recirculation	●	●	●	●
Micro-filter ventilation system with replaceable active-charcoal filters	●	●	●	●
2-way power glass moonroof with remote, expanded "one-touch" operation, anti-trapping feature, and sliding interior sunshade	●	●	●	●
Automatic tilt-down of passenger's side-view mirror (when car is shifted into reverse gear)	●	●	●	●
Power tilt and telescopic steering wheel with automatic tilt-up	●	●	●	●
Power windows with key-off and "one touch" up and down operation both front and rear, anti-trapping feature, opening from remote, and closing from exterior lock	●	●	●	●
Power rear-window sunshade and manual rear side-window sunshades with 2 shade sections per door	○	○	○	○
Interior courtesy lights with automatic dimming function	●	●	●	●
Front map lights and rear reading lights with separate controls for the left and right	●	●	●	●
BMW Ambiance Lighting	●	●	●	●
Dual front sun visors with illuminated mirrors	●	●	●	●
Dual cupholders in front and rear	●	●	●	●
Heated driver's door lock and rear window defroster	●	●	●	●
3-stage heated front seats[10]	◆	◆	◆	◆
3-stage heated rear seats[11]	○	○	○	○
Heated steering wheel	◆	◆	◆	◆
Fully finished trunk with drop-down tool kit and interior trunk release	●	●	●	●
Integrated 3-button Universal garage-door opener	◇	◇	●	●
Power outlet in front passenger's footwell, back of center console, and in trunk	●	●	●	●
Lockable glove compartment with rechargeable take-out flashlight	●	●	●	●

Safety and security				
Driver's and passenger's front airbag supplemental restraint system (SRS) with dual-threshold deployment, 2-stage Smart Airbags	●	●	●	●
Front- and rear-seat Head Protection System (AHPS II)	●	●	●	●
Front-door-mounted side-impact airbags	●	●	●	●
Rear-seat side-impact airbags and automatic tensioners on rear outboard safety belts	○	○	○	○
Front safety belts with automatic tensioners and force limiters	●	●	●	●
Automatic-locking retractors (ALR) on all safety belts (for installation of child-restraint seats)	●	●	●	●
Interlocking door anchoring system to help protect against door intrusion in side impacts	●	●	●	●
Intelligent Safety and Information System (ISIS) for deployment of safety systems	●	●	●	●
Impact sensor that activates Battery Safety Terminal disconnect of alternator, fuel pump and starter from battery, turns on hazard lights, interior lights and unlocks doors	●	●	●	●
Coded Driveaway Protection (prevents engine start when your key with constantly changing electronic code is not used)	●	●	●	●
Remote keyless entry security alarm system with selective unlocking and double-lock feature (programmed at BMW center), remote trunk opening, interior motion detector, and panic feature	●	●	●	●
Adaptive Brake Lights	●	●	●	●

امداد خودرو فارسا
تلفن شبانه روزی: ۰۲۱-۸۸۸۶۲۰۸۵
FarsaSOS.com

● = Standard
○ = Optional
◇ = Included in optional Premium Package
□ = Included in optional Sport Package
◆ = Included in optional Cold Weather Package
■ = Included in optional Premium Sound Package

[10] Features depend upon type of front seats.
[11] Requires Cold Weather Package.

Audio system	525i	530i	545i	545i 6-speed
Anti-theft AM/FM stereo/CD audio system with 10 speakers, Radio Data System (RDS), Auto-Store, and FM diversity antenna system	●	●	●	●
Logic7 sound system with 13 speakers, Surround Sound, Digital Sound Processing (including two subwoofers)	■	■	■	■
6-disc CD changer mounted in glove compartment; includes all features of standard audio system	■	■	■	■
Pre-wiring for BMW center installation of BMW 6-CD changer and BMW mobile telephone	●	●	●	●
BMW Maintenance Program				
BMW Full Maintenance[12]	●	●	●	●
Premium Packages				
Dakota leather upholstery and door trim	◇	◇	●	●
4-way power lumbar support for front seats	◇	◇	○	○
Poplar Grain wood trim	◇	◇	●	●
Integrated 3-button Universal garage-door opener	◇	◇	●	●
Auto-dimming inside rear-view mirror	◇	◇	●	●
Lighting Package	◇	◇	●	●
Sport Packages				
17 x 8.0 Star Spoke (Styling 122) alloy wheels, 245/45R-17 performance run-flat tires[13]	□			
18 x 8.0 Star Spoke (Styling 123) alloy wheels, 245/40R-18 performance run-flat tires[13]		□		
18 x 8.0 front, 18 x 9.0 rear Star Spoke (Styling 124) alloy wheels, 245/40R-18 front, 275/35R-18 rear performance run-flat tires[13]			□	●
12-way power front sport seats with power adjustable thigh support	□	□	□	●
Active Roll Stabilization (ARS)	□	□	□	●
Sport suspension calibration	□	□	□	●
Active Steering with Servotronic power assist	□	□	□	●
Shadowline exterior trim	□	□	□	●
Premium Sound Package				
Logic7 sound system with 13 speakers, Surround Sound, Digital Sound Processing (including two subwoofers)	■	■	■	■
6-disc CD changer mounted in glove compartment; includes all features of standard audio system	■	■	■	■
Cold Weather Package				
3-stage heated front seats[10]	◆	◆	◆	◆
3-stage heated rear seats[11]	○	○	○	○
High-pressure headlight cleaning system	◆	◆	◆	◆
Heated steering wheel	◆	◆	◆	◆

امداد خودرو فارما
تلفن شبانه روزی: ۰۲۱-۸۸۸۶۲۰۸۵
FarmaSOS.com

[12] Full Maintenance Program covers all factory-recommended maintenance, as determined by the Service Interval Indicator for 4 years or 50,000 miles, whichever comes first. Full Maintenance Program includes items that need replacement due to normal wear and tear, provided wear and tear exceeds BMW specifications. This includes items such as brake pads, brake rotors and wiper blades that are not covered by the original New Vehicle Limited Warranty. Any adjustments required due to normal operating conditions are also included. For exclusions and limitations, refer to the Service and Warranty Information booklet that came with your new BMW, or see your authorized BMW center for details.

[13] Spare is a space-saver wheel and tire. Due to low-profile tires, please note: wheels, tires and suspension parts are more susceptible to road hazard and consequential damages.

Specifications | Technical data

Weight[1]		525i	530i	545i	545i 6-speed
Unladen					
Manual transmission	lbs	3417	3461		3737
Sequential Manual Gearbox (SMG)	lbs	3439	3483		3759
Automatic transmission	lbs	3450	3483	3748	
Weight distribution, front/rear					
Manual transmission	%	50.2/49.8	50.4/49.6		50.9/49.1
Sequential Manual Gearbox (SMG)	%	50.2/49.8	50.4/49.6		50.9/49.1
Automatic transmission	%	50.5/49.5	50.9/49.1	51.1/48.9	
Engine					
Liter/type		2.5/inline 6	3.0/inline 6	4.4/V-8	4.4/V-8
Bore/stroke	inch	3.31 x 2.95	3.31 x 3.53	3.50 x 3.15	3.50 x 3.15
Nominal output/rpm	hp	184/6000	225/5900	325/6100	325/6100
Max. torque/rpm	lb-ft	175/3500	214/3500	330/3600	330/3600
Compression ratio	:1	10.5	10.2	10.5	10.5
Fuel grade		Unleaded premium	Unleaded premium	Unleaded premium	Unleaded premium
Transmission					
Standard gear ratios	I/II/III :1	4.35/2.50/1.66	4.35/2.50/1.66		4.06/2.40/1.58
	IV/V/VI/R :1	1.23/1.00/0.85/3.93	1.23/1.00/0.85/3.93		1.19/1.00/0.87/3.77
	Final drive ratio :1	3.15	2.93		2.93
Automatic gear ratios	I/II/III :1	4.17/2.34/1.52	4.17/2.34/1.52	4.17/2.34/1.52	
	IV/V/VI :1	1.14/0.87/0.69	1.14/0.87/0.69	1.14/0.87/0.69	
	Final drive ratio :1	3.73	3.46	3.38	
Performance					
Drag coefficient	C_d	0.28	0.29	0.29	0.29
Top speed[2]	mph	146 (144)	150	150	150
Acceleration 0–60 mph					
Manual transmission or SMG	sec	7.8[3]	6.6[3]	—	5.7[3]
Automatic transmission	sec	8.2	6.9	5.8	—
Fuel consumption[4]					
Manual transmission or SMG					
City/Highway	mpg	TBD/TBD	TBD/TBD		TBD/TBD
Automatic transmission					
City/Highway	mpg	TBD/TBD	TBD/TBD	TBD/TBD	
Fuel capacity	U.S. gal	18.5	18.5	18.5	18.5
Tires, Wheels and Brakes					
Tire dimensions	standard	225/55R-16	225/50R-17	225/50R-17	245/40R-18[5] front 275/35R-18[5] rear
Wheel dimensions	standard	16x7.0	17x7.5	17x7.5	18 x 8.0 front 18 x 9.0 rear
Material	standard	Cast alloy	Cast alloy	Cast alloy	Cast alloy
Brakes					
Front (diameter x thickness)	in	12.2 x 0.94	12.8 x 1.18	13.7 x 1.18	13.7 x 1.18
Rear (diameter x thickness)	in	12.6 x 0.79	12.6 x 0.79	13.6 x 0.94	13.6 x 0.94

امداد خودرو فارما
تلفن شبانه روزی: ۰۲۱-۸۸۸۶۲۰۸۰
FarmaSOS.com

Figures in ( ) apply to vehicles with automatic transmission.

[1] Preliminary data.
[2] Top speed limited electronically.
[3] When equipped with Sequential Manual Gearbox (SMG).
[4] EPA-estimated figures are for comparison purposes only. Your actual mileage will vary, depending on speed, driving habits, trip length and driving conditions; actual mileage will most likely be lower.
[5] Due to low-profile tires, please note: wheels, tires and suspension parts are more susceptible to road hazard and consequential damages.

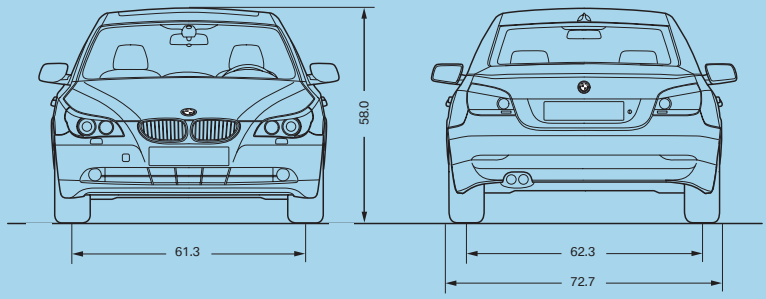

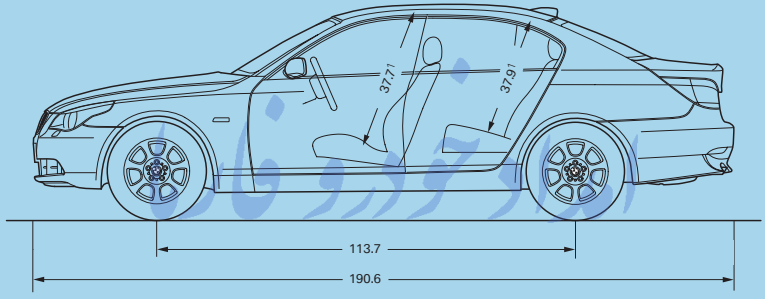

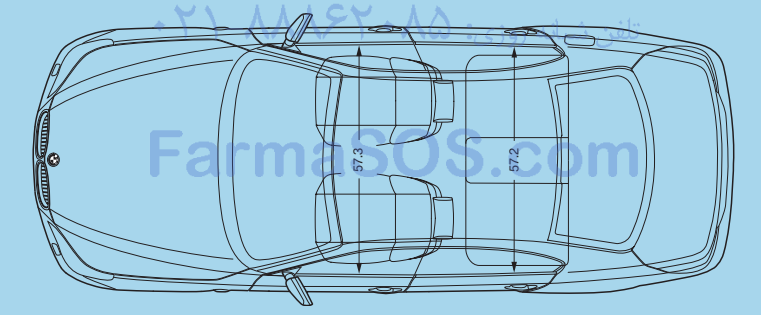

FarmaSOS.com

All dimensions are shown in inches and apply to models with standard wheels.

[1] Figures shown are with power glass moonroof.

U.S. Importer: BMW of North America, LLC, Woodcliff Lake, NJ 07677. All illustrations and specifications contained in this brochure are based on the latest product information available at the time of printing. BMW reserves the right to make changes at any time, without notice, in colors, materials, equipment, specifications and models. BMW may, subject to legal requirements, determine the Model Year designation of its vehicles. The Model Year designation on any particular model may be longer or shorter than 12 months. Some vehicles pictured may contain non-U.S. equipment. Some models may be shown with optional equipment. Further information can be obtained from your authorized BMW center or bmwusa.com.

© 2003 BMW AG, Munich/Germany. Not to be reproduced wholly or in part without written permission of BMW AG, Munich.

BMW recommends Castrol